40VRRM SBD Schottky Diode SS34A 28VRMS 3A I(AV) 0.55 VF DO-214AC

Our Product Introduction

Basic Information

- Place of Origin: Shenzhen, Guangdong, China
- Brand Name: SOCAY
- Certification: REACH,RoHS,ISO
- Model Number: SS34A
- Minimum Order Quantity: 5000PCS
- Price: Negotiable
- Delivery Time: 5-8 work days

Product Specification

- SBD Name: Schottky Barrier Diode
- SBD Package: DO-214AC(SMA)
- SBD Max. VRRM: 40V
- Diode Max. VRMS: 28V
- SBD Max. VDC: 40V
- Max. Average Forward Rectified Current: 3A
- IFSM: 100A
- VF: 0.55V
- Highlight: **DO-214AC Schottky Diode**, **Schottky Diode SS34A**, **SS34A**

for more products please visit us on socaydiode.com

Product Description

40VRRM SBD Schottky Diode SS34A 28VRMS 3A I(AV) 0.55 VF DO-214AC

SBD Schottky Diode DATASHEET: SS32A~SS320A(SMA)_v2205.1.pdf

40VRRM Schottky Diode SS34A Features:
Guardring for overvoltage protection
Very small conduction losses
Extremely fast switching
Low forward voltage drop is nice
For surface mounted applications
Solder dip 260 , 40 s
Component in accordance to RoHS 2002/95/EC and WEEE 2002/96/EC

40VRRM Schottky Diode SS34A Mechanical Data:
Schottky Diode SS34A Case: JEDEC SMA molded plastic
SS34A Terminals: Solder plated, solderable per J-STD-002B and JESD22-B102D
Schottky Diode Polarity: Color band denotes cathode end
Mounting Position: Any
Weight: 0.07 grams

Schottky Diode SS34A Main Ratings and Features:

Schottky Diode $I_{F(AV)}$	3.0A
Schottky Diode V_{RRM}	20 V to 200 V
SS34A I_{FSM}	100A
Schottky Diode V_F	0.45V, 0.55V, 0.70V, 0.85V,0.95V
$T_{j\ max.}$	125

Schottky Diode SS34A Max. Ratings & Thermal Characteristics:

Ratings at 25 ambient temperature unless otherwise specified.
Single phase half-wave 60Hz,resistive or inductive load,for capacitive load current derate by 20%.

Parameter		Symbol	SS32A	SS33A	SS34A	SS35A	SS36A	SS38A	SS310A	SS315A	SS320A	Unit
Maximum repetitive peak reverse voltage		VRRM	20	30	40	50	60	80	100	150	200	V
Maximum RMS voltage		VRMS	14	21	28	35	42	56	70	105	140	V
Maximum DC blocking voltage		VDC	20	30	40	50	60	80	100	150	200	V
Maximum average forward rectified current		I(AV)	3.0									A
Peak forward surge current 8.3ms single half sine-wave superimposed on rated load (JEDEC Method)		IFSM	100									A
Maximum instantaneous forward voltage at 3.0A		VF	0.45	0.55		0.70		0.85			0.95	V
Maximum DC reverse current at rated DC blocking voltage	TA=25	IR	0.5							0.2		mA
	TA=100		20					10		2		
Typical junction capacitance		CJ	500.0			300.0						pF
Typical thermal resistance		RθJA	88.0									/W
Operating junction temperature range		TJ	-65 to +125					-65 to +150				
Storage temperature range		TSTG	-65 to +150									

Note: Measured at 1MHz and applied reverse voltage of 4.0V D.C.
Mounted on 0.2" x 0.2" (5.0 mm x 5.0 mm) copper pad areas.

Schottky Diode SS34A Dimensions:

for more products please visit us on socaydiode.com

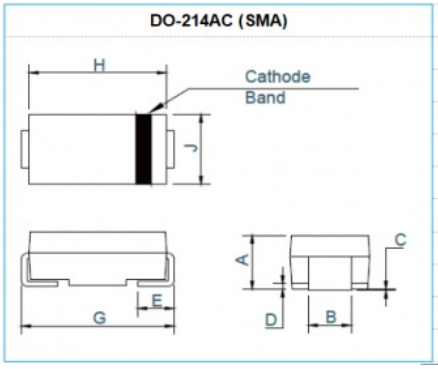

Dimensions				
Dim	Inches		Millimeters	
	Min	Max	Min	Max
A	0.067	0.093	1.7	2.36
B	0.049	0.067	1.25	1.7
C	0.002	0.008	0.05	0.2
D	--	0.02	--	0.51
E	0.03	0.06	0.76	1.52
G	0.185	0.209	4.7	5.31
H	0.157	0.185	4	4.7
J	0.086	0.11	2.18	2.8

Schottky Diode SS34A Notice:
Schottky Diode SS34A is intended for use in general electronics applications.
Schottky Diode SS34A should be worked less than the ratings; if exceeded, it may cause permanent damage. so ensure safety.
The absolute maximum ratings of Schottky Diode SS34A are rated values and must not be exceeded during operation. The following are the general derating methods you design a circuit with a device.

SOCAY® **Shenzhen Socay Electronics Co., Ltd.**

+8618126201429 sylvia@socay.com socaydiode.com

4/F, Block C, HeHengXing Science & Technology Park, 19 MinQing Road, LongHua District, Shenzhen City, GuangDong Province, China